SFP-10G-GIG-LR-A

10GBASE, SFP+, LR Transceiver

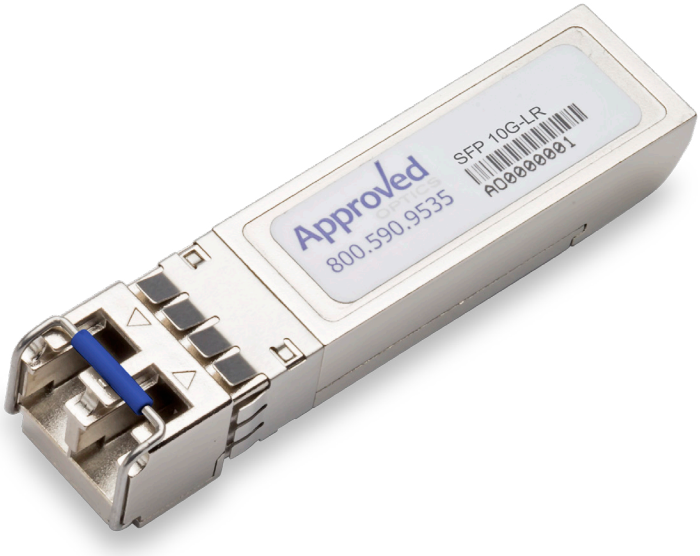

Features

- Up to 11.1Gbps Data Links
- Up to 10km transmission on SMF
- DBF Laser and PIN receiver
- Metal enclosure, for lower EMI
- 2-wire interface with integrated Digital Diagnostic monitoring
- Specifications compliant with SFF 8472
- Compliant with SFP+ MSA with LC connector
- Single 3.3V power supply
- Power dissipation < 1.2 W
- Commercial case operating temperature range: 0°C to +70°C

Applications

- 10GBASE-LR/LW & 10G Ethernet

Standard

- Compliant to SFF-8431
- Compliant to SFF 8472
- RoHS Compliant.

1. Description

The Approved Networks SFP+ transceiver is designed for use in 10-Gigabit Ethernet links up to 10km over single mode fiber. The module consists of 1310 DBF Laser, PIN reciever. Digital diagnostics functions are available via a 2-wire serial interface, as specified in SFF8472. The module data link up to 10km in 9/125um single mode fiber.

2. Absolute Maximum Ratings

Any stress beyond the maximum ratings can result in permanent damage. The device specifications are guaranteed only under the recommended operating conditions.

Parameter	Symbol	Min	Typ	Max	Unit
Storage Temperature	Ts	-40	-	85	ºC
Relative Humidity	RH	5	-	95	%
Power Supply Voltage	VCC	-0.3	-	4	V

3. Recommended Operating Conditions

Parameter	Symbol	Min	Typ	Max	Unit	Notes
Case Operating Temperature	Tcase	0	-	70	ºC	Commercial
Power Supply Voltage	VCC	3.14	3.3	3.47	V	
Power Supply Current	ICC	-		450	mA	
Data Rate	BR		10.3125		Gbps	
Transmission Distance	TD		-	10	km	
Coupled fiber	Single mode fiber					9/125um SMF

4. Optical Characteristics

Transmitter						
Parameter	**Symbol**	**Min**	**Typ**	**Max**	**Unit**	**Note**
Average Launched Power	Pout	-6		-0.5	dBm	1
Extinction Ratio	ER	3.5			dB	
Optical Wavelength	λ	1260	1310	1355	nm	
Spectrum Band Width (-20dB)	σ			1.0	nm	
Output Eye Mask	Compliant with IEEE 802.3ae					
Receiver						
Parameter	**Symbol**	**Min**	**Typ**	**Max**	**Unit**	**Note**
Input Optical Wavelength	λc	1270		1610	nm	
Receiver Sensitivity	Psen			-14.4	dBm	2
Input Saturation Power (Overload)	Psat	0.5			dBm	
LOS Assert	LOSA	-30			dBm	
LOS De-assert	LOSD			-17	dBm	
LOS Detect Hysteresis	PHYS	0.5	1.0		dB	

Notes

1. Class 1 Laser Safety per FDA/CDRH and IEC-825-1 regulations.

2. Measured with a PRBS 2^{31}-1 test pattern, @10.3125Gb/s, BER<10^{-12}.

5. Electrical Characteristics

Parameter	Symbol	Min	Typ	Max	Unit	Notes
Supply Voltage	Vcc	3.14	3.3	3.46	V	
Supply Current	Icc			360	mA	
Transmitter						
Parameter	**Symbol**	**Min**	**Typ**	**Max**	**Unit**	**Notes**
Input differential impedance	Rin		100		Ω	1
Single ended data input swing	Vin,pp	180		700	mV	
Transmit Disable Voltage	VD	Vcc–1.3		Vcc	V	
Transmit Enable Voltage	VEN	Vee		Vee+ 0.8	V	2
Transmit Disable Assert Time				10	us	
Receiver						
Parameter	**Symbol**	**Min**	**Typ**	**Max**	**Unit**	**Notes**
Differential data output swing	Vout,pp	300		850	mV	3
Data output rise time	tr	28			ps	4
Data output fall time	tf	28			ps	4
LOS Fault	VLOS fault	Vcc–1.3		VccHOST	V	5
LOS Normal	VLOS norm	Vee		Vee+0.8	V	5
Power Supply Rejection	PSR	100			mVpp	6

Notes:

1. Connected directly to TX data input pins. AC coupled thereafter.

2. Or open circuit.

3. Into 100 ohms differential termination.

4. 20 – 80 %.

5. Loss Of Signal is LVTTL. Logic 0 indicates normal operation; logic 1 indicates no signal detected.

6. Receiver sensitivity is compliant with power supply sinusoidal modulation of 20 Hz to 1.5 MHz up to specified value applied through the recommended power supply filtering network.

6. Pin Description

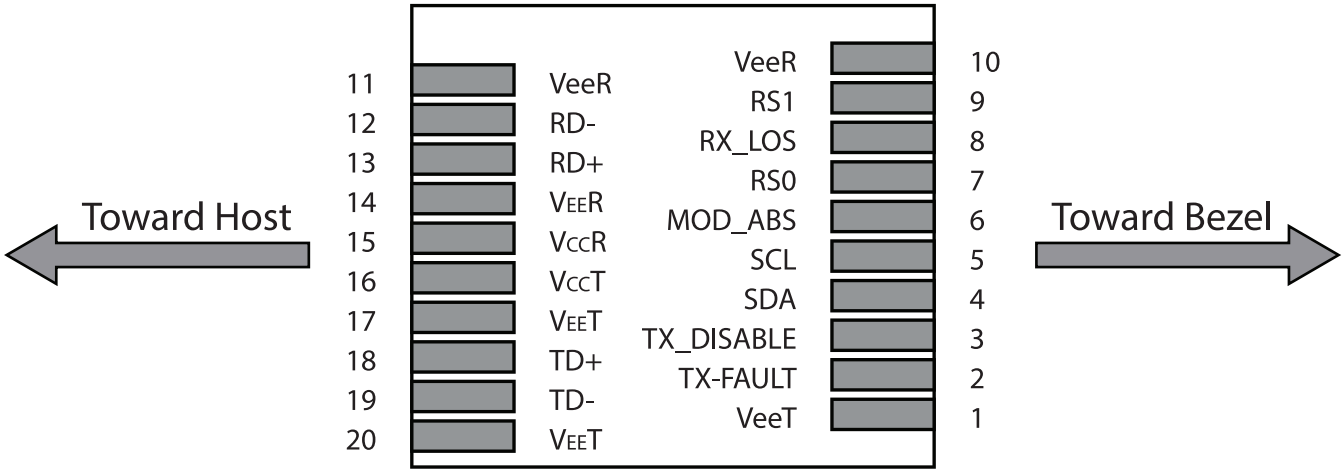

Figure 1. Pin out of Connector Block on Host Board

Pin	Symbol	Name/Description	Notes
1	VEET	Transmitter Ground (Common with Receiver Ground)	1
2	TFAULT	Transmitter Fault.	2
3	TDIS	Transmitter Disable. Laser output disabled on high or open.	3
4	SDA	2-wire Serial Interface Data Line	4
5	SCL	2-wire Serial Interface Clock Line	4
6	MOD_ABS	Module Absent. Grounded within the module	4
7	RS0	Rate Select 0	5
8	LOS	Loss of Signal indication. Logic 0 indicates normal operation.	6
9	RS1	No connection required	1
10	VEER	Receiver Ground (Common with Transmitter Ground)	1
11	VEER	Receiver Ground (Common with Transmitter Ground)	1
12	RD-	Receiver Inverted DATA out. AC Coupled	
13	RD+	Receiver Non-inverted DATA out. AC Coupled	
14	VEER	Receiver Ground (Common with Transmitter Ground)	1
15	VCCR	Receiver Power Supply	
16	VCCT	Transmitter Power Supply	
17	VEET	Transmitter Ground (Common with Receiver Ground)	1
18	TD+	Transmitter Non-Inverted DATA in. AC Coupled.	
19	TD-	Transmitter Inverted DATA in. AC Coupled.	
20	VEET	Transmitter Ground (Common with Receiver Ground)	1

Notes:

1. Circuit ground is internally isolated from chassis ground.

2. TFAULT is an open collector/drain output, which should be pulled up with a 4.7k – 10k Ohms resistor on the host board if intended for use. Pull up voltage should be between 2.0V to Vcc + 0.3V.A high output indicates a transmitter fault caused by either the TX bias current or the TX output power exceeding the preset alarm thresholds. A low output indicates normal operation. In the low state, the output is pulled to <0.8V.

3. Laser output disabled on TDIS >2.0V or open, enabled on TDIS <0.8V.

4. Should be pulled up with 4.7kΩ- 10kΩ host board to a voltage between 2.0V and 3.6V. MOD_ABS pulls line low to indicate module is plugged in.

5. Internally pulled down per SFF-8431 Rev 4.1.

6. LOS is open collector output. It should be pulled up with 4.7kΩ – 10kΩ on host board to a voltage between 2.0V and 3.6V. Logic 0 indicates normal operation; logic 1 indicates loss of signal.

7. Digital Diagnostic Functions

This transceiver supports the 2-wire serial communication protocol as defined in the SFP+ MSA. The standard SFP serial ID provides access to identification information that describes the transceiver's capabilities, standard interfaces, manufacturer, and other information.

Additionally, SFP+ transceivers provide a unique enhanced digital diagnostic monitoring interface, which allows real-time access to device operating parameters such as transceiver temperature, laser bias current, transmitted optical power, received optical power and transceiver supply voltage. It also defines a sophisticated system of alarm and warning flags, which alerts end-users when particular operating parameters are outside of a factory set normal range.

The SFP MSA defines a 256-byte memory map in EEPROM that is accessible over a 2-wire serial interface at the 8 bit address 1010000X (A0h).The digital diagnostic monitoring interface makes use of the 8 bit address 1010001X (A2h), so the originally defined serial ID memory map remains unchanged.

The operating and diagnostics information is monitored and reported by a Digital Diagnostics Transceiver Controller (DDTC) inside the transceiver, which is accessed through a 2-wire serial interface. When the serial protocol is activated, the serial clock signal (SCL, Mod Def 1) is generated by the host. The positive edge clocks data into the SFP transceiver into those segments of the E2PROM that are not write-protected. The negative edge clocks data from the SFP transceiver. The serial data signal (SDA, Mod Def 2) is bi-directional for serial data transfer. The host uses SDA in conjunction with SCL to mark the start and end of serial protocol activation. The memories are organized as a series of 8-bit data words that can be addressed individually or sequentially.

8. Recommended Interface Circuit

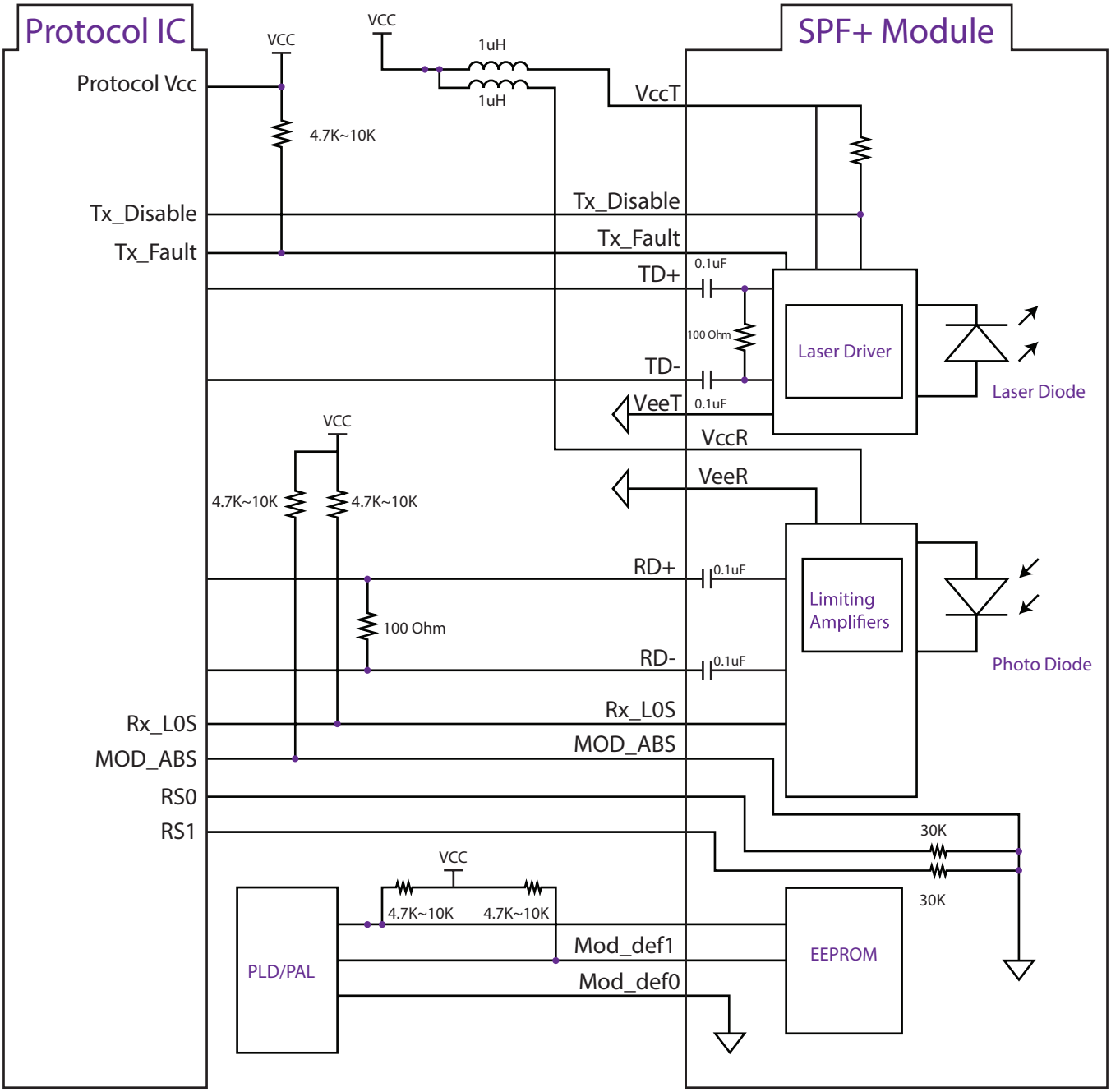

9. Outline Dimentions

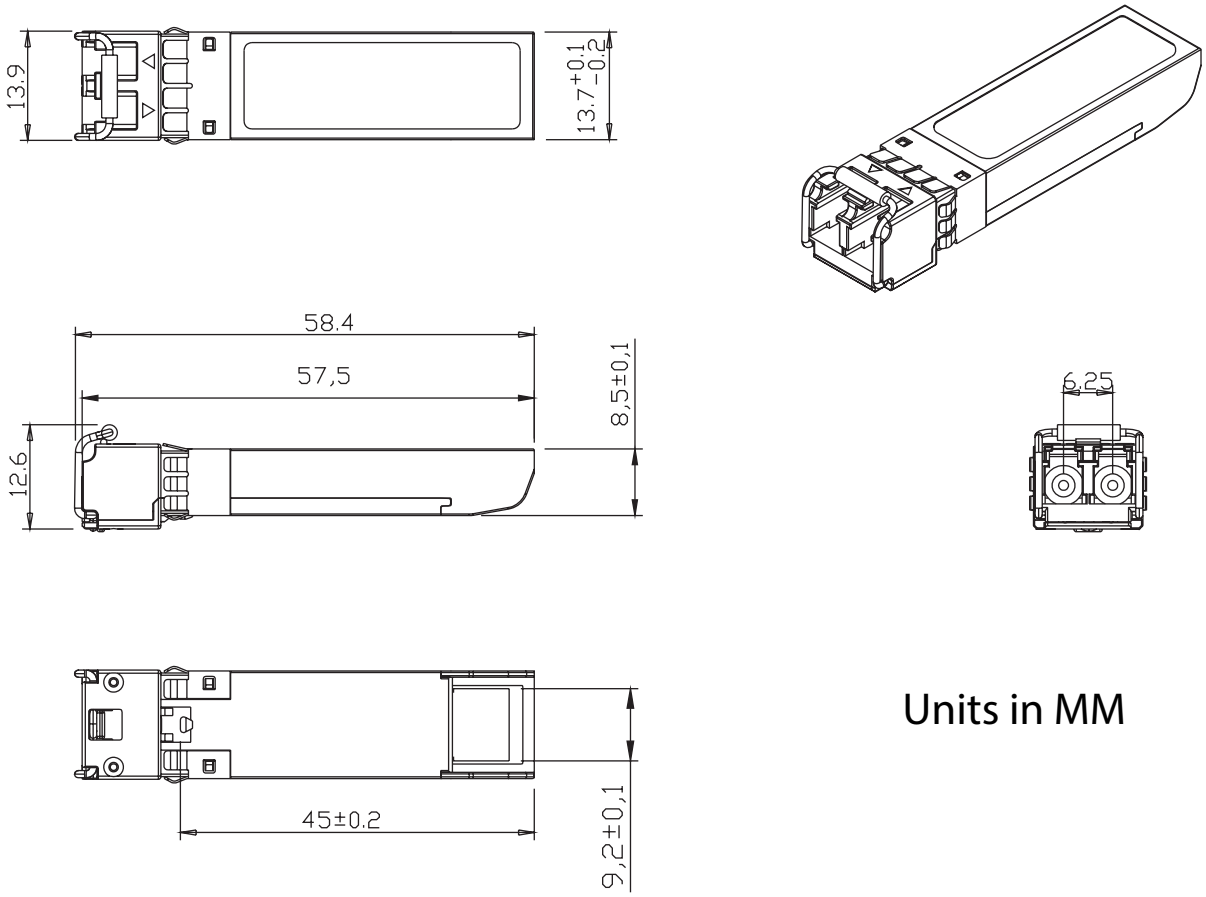

Units in MM

10. Regulatory Compliance

Feature	Reference	Performance
Electrostatic discharge (ESD)	IEC/EN 61000-4-2	Compatible with standards
Electromagnetic Interference (EMI)	FCC Part 15 Class B EN 55022 Class B (CISPR 22A)	Compatible with standards
Laser Eye Safety	FDA 21CFR 1040.10, 1040.11 IEC/EN 60825-1, 2	Class 1 laser product
Component Recognition	IEC/EN 60950, UL	Compatible with standards
ROHS	2002/95/EC	Compatible with standards
EMC	EN61000-3	Compatible with standards

11. Contact Information

Approved Networks is a leading supplier of Network Transceivers and Connectivity products to Channel Partners, Resellers, and OEMs. With more than 9 years of direct industry experience, our products are resident in the most demanding and mission critical functional networks Worldwide. We serve as a Master Distributor to the largest CMs in the world and deploy the most rigorous testing and firmware management programs to bring the highest level of functional product to the market at a cost that makes sense.

Corporate Offices: **Approved Networks, Inc.**
Tel: 800.590.9535
Web: http://www.approvednetworks.com