CWDM-SFP-1510-40-A

1GBASE, SFP, CWDM, ZX Transceiver

Features

- Up to 1.25Gb/s Data Links
- Hot-Pluggable
- Duplex LC connector
- Up to 40km on 9/125μm SMF
- 1470nm~1610nm DFB laser transmitter
- PIN Receiver
- Single +3.3V Power Supply
- Monitoring Interface Compliant with SFF-8472
- Low power dissipation <1W typically
- Commercial operating temperature range: -0°C to 70°C
- RoHS compliant and Lead Free

Applications

- Metro/Access Networks
- 1.25 Gb/s 1000Base-EX Ethernet
- 1×Fibre Channel
- CWDM Networks

1. Description

Approved Networks 1GBASE-SFP-EX-CWDM Transceiver is a high performance, cost effective module which has a duplex LC optics interface. Standard AC coupled CML for high speed signal and LVTTL control and monitor signals. The receiver section uses an PIN receiver and the transmitter uses a CWDM DFB laser, up to 19dB link budge ensure this module 1000Base Ethernet 40km application.

2. Absolute Maximum Ratings

Parameter	Symbol	Min.	Typ.	Max.	Unit
Storage Temperature	Ts	-40		85	°C
Relative Humidity	RH	0		85	%
Power Supply Voltage	VCC	-0.5		4	V

3. Recommended Operating Environment

Parameter	Symbol	Min	Typ	Max	Unit
Case operating Temperature	TC	0		70	°C
Supply Voltage	VCC	3.135		3.465	V
Supply Current	Icc			300	mA
Inrush Current	Isurge			Icc+30	mA
Maximum Power	Pmax			1	W

4. Electrical Characteristics

(TOP = -40 to 85°C, VCC = 3.135 to 3.465 Volts)

Transmitter Section:						
Parameter	**Symbol**	**Min**	**Typ**	**Max**	**Unit**	**Note**
Input differential impedance	Rin	90	100	110	Ohm	1
Single ended data input swing	Vin PP	250		1200	mVpp	
Transmit Disable Voltage	VD	Vcc –1.3		Vcc	V	2
Transmit Enable Voltage	VEN	Vee		Vee+0.8	V	
Transmit Disable Assert Time	Tdessert			10	us	
Receiver Section:						
Parameter	**Symbol**	**Min**	**Typ**	**Max**	**Unit**	**Note**
Single ended data output swing	Vout,pp	250		800	mv	3
LOS Fault	Vlosfault	Vcc –0.5		VCC_host	V	5
LOS Normal	Vlosnorm	Vee		Vee+0.5	V	5
Power Supply Rejection	PSR	100			mVpp	6

Notes:

1. Or open circuit.
2. Into 100 ohm differential termination.
3. 20 – 80 %

4. LOS is LVTTL. Logic 0 indicates normal operation; logic 1 indicates no signal detected.

All transceiver specifications are compliant with a power supply sinusoidal modulation of 20 Hz to 1.5MHz up to specified value applied through the power supply filtering network shown on page 23 of the Small Form-factor Pluggable (SFP) Transceiver Multi-Source Agreement (MSA), September 14, 2000.

5. Optical Parameters

(TOP = -40 to 85°C, VCC = 3.135 to 3.465 Volts)

Transmitter Section:						
Parameter	**Symbol**	**Min**	**Typ**	**Max**	**Unit**	**Notes**
Center Wavelength	λc	λ-3	λ	λ+3	nm	
Spectral Width	σ			1	nm	
Side Mode Supression Ratio	SSRmin	30			dB	
Optical Output Power	Pout	-5		0	dBm	1
Extinction Ratio	ER	9			dB	
Optical Rise/Fall Time	tr / tf			260	ps	2
Relative Intensity Noise	RIN			-120	dB/Hz	
Total Jitter Contribution	TX Δ TJ			0.284	UI	3
Output Eye Mask	Compliant with IEEE802.3 z (class 1 laser safety)					
Receiver Section:						
Parameter	**Symbol**	**Min**	**Typ**	**Max**	**Unit**	**Notes**
Optical Input Wavelength	λc	1270		1610	nm	
Receiver Overload	Pol	-7			dBm	4
RX Sensitivity	Sen			-24	dBm	4
RX_LOS Assert	LOS A	-40			dBm	
RX_LOS De-assert	LOS D			-25	dBm	
RX_LOS Hysteresis	LOS H	0.5			dB	
General Specifications:						
Parameter	**Symbol**	**Min**	**Typ**	**Max**	**Unit**	**Notes**
Data Rate	BR		1.25		Gb/s	
Bit Error Rate	BER			10^{-12}		
Max. Supported Link Length on 9/125µm SMF@1.25Gb/s	LMAX		40		Km	
Total System Budget	LB	19			dB	

Notes:

1. The optical power is launched into SMF.

2. 20-80%.

3. Jitter measurements taken using Agilent OMNIBERT 718 in accordance with GR-253.

4. Measured with PRBS 2^{7-1} at 10^{-12} BER

6. Pin Assignment

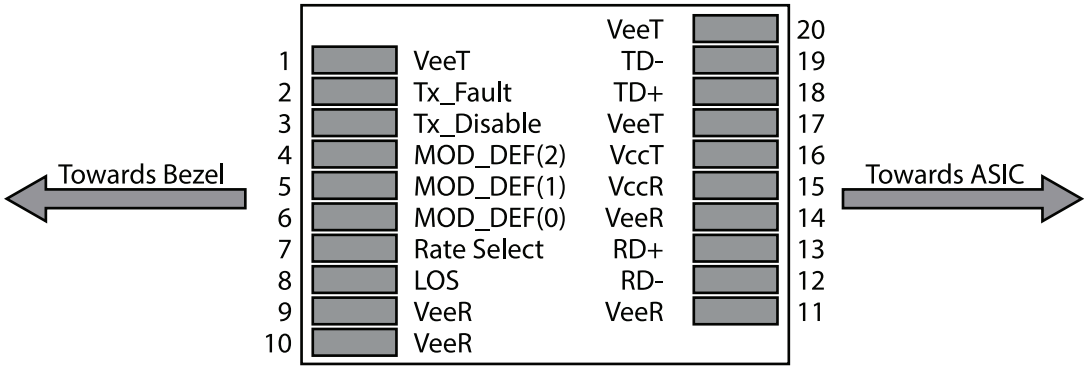

Figure 1. Pin out of Connector Block on Host Board

7. Pin Descriptions

Pin #	Name	Function	Plug Seq	Notes
1	VeeT	Transmitter Ground	1	1
2	TX Fault	Transmitter Fault Indication	3	
3	TX Disable	Transmitter Disable	3	2
4	MOD-DEF2	Module Definition	2	3
5	MOD-DEF1	Module Definition 1	3	3
6	MOD-DEF0	Module Definition 0	3	3
7	Rate Select	Not Connected	3	4
8	LOS	Loss of Signal	3	5
9	VeeR	Receiver Ground	1	1
10	VeeR	Receiver Ground	1	1
11	VeeR	Receiver Ground	1	
12	RD-	Inv. Received Data Out	3	6
13	RD+	Received Data Out	3	6
14	VeeR	Receiver Ground	3	1
15	VccR	Receiver Power	2	1
16	VccT	Transmitter Power	2	
17	VeeT	Transmitter Ground	1	
18	TD+	Transmit Data In	3	6
19	TD-	Inv. Transmit In	3	6
20	VeeT	Transmitter Ground	1	

Notes:

1. Circuit ground is internally isolated from chassis ground.

2. Laser output disabled on TDIS >2.0V or open, enabled on TDIS <0.8V.

3. Should be pulled up with 4.7k - 10 kohms on host board to a voltage between 2.0V and 3.6V. MOD_DEF(0) pulls line low to indicate module is plugged in.

4. Rate select is not used

5. LOS is open collector output. Should be pulled up with 4.7k – 10 kohms on host board to a voltage between 2.0V and 3.6V. Logic 0 indicates normal operation; logic 1 indicates loss of signal.

6. 6. AC Coupled

8. SFP Module EEPROM Information and Management

The SFP modules implement the 2-wire serial communication protocol as defined in the SFP -8472. The serial ID information of the SFP modules and Digital Diagnostic Monitor parameters can be accessed through the I2C interface at address A0h and A2h. The memory is mapped in Table 1. Detailed ID information (A0h) is listed in Table 2. And the DDM specification at address A2h. For more details of the memory map and byte definitions, please refer to the SFF-8472, "Digital Diagnostic Monitoring Interface for Optical Transceivers". The DDM parameters have been internally calibrated.

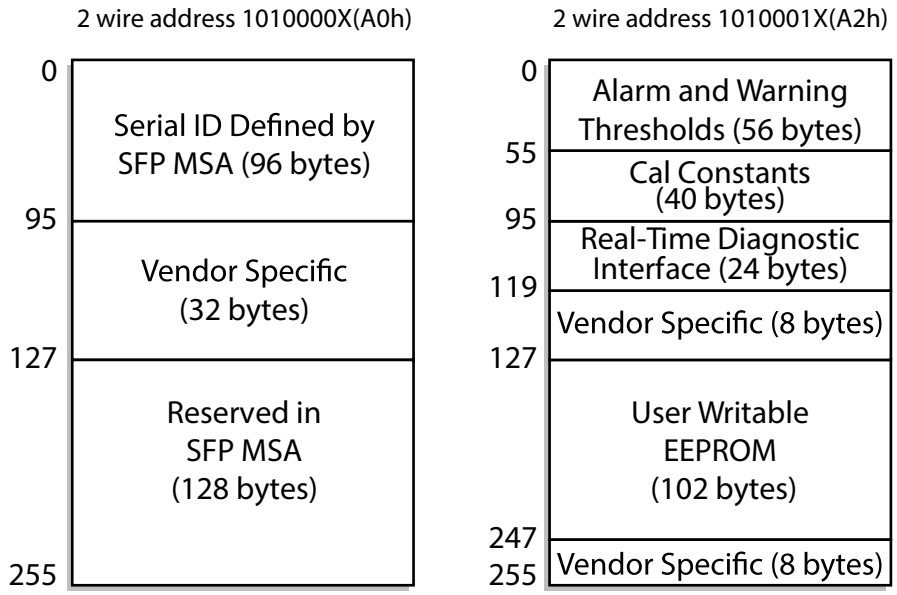

Table 1. Digital Diagnostic Memory Map (Specific Data Field Descriptions)

Base ID Fields			
Data Address	**Length (Byte)**	**Name of Length**	**Description and Contents**
0	1	Identifier	Type of Serial transceiver (03h=SFP)
1	1	Reserved	Extended identifier of type serial transceiver (04h)
2	1	Connector	Code of optical connector type (07=LC)
3-10	8	Transceiver	
11	1	Encoding	NRZ(03h)
12	1	BR, Nominal	Nominal baud rate, unit of 100Mbps
13-14	2	Reserved	(0000h)
15	1	Length(9um)	Link length supported for 9/125um fiber, units of 100m
16	1	Length(50um)	Link length supported for 50/125um fiber, units of 10m
17	1	Length(62.5um)	Link length supported for 62.5/125um fiber, units of 10m
18	1	Length(Copper)	Link length supported for copper, units of meters
19	1	Reserved	
20-35	16	Vendor Name	SFP vendor name
36	1	Reserved	
37-39	3	Vendor OUI	SFP transceiver vendor OUI ID
40-55	16	Vendor PN	Part Number (ASCII)
56-59	4	Vendor rev	Revision level for part number
60-62	3	Reserved	
63	1	CCID	Least significant byte of sum of data in address 0-62
Extended ID Fields			
Data Address	**Length (Byte)**	**Name of Length**	**Description and Contents**
64-65	2	Option	Indicates which optical SFP signals are implemented (001Ah = LOS, TX_FAULT, TX_DISABLE all supported)
66	1	BR, max	Upper bit rate margin, units of %
67	1	BR, min	Lower bit rate margin, units of %
68-83	16	Vendor SN	Serial number (ASCII)
84-91	8	Date code	Manufacturing date code
92-94	3	Reserved	
95	1	CCEX	Check code for the extended ID Fields (addresses 64 to 94)

Vendor Specific ID Fields			
Data Address	**Length (Byte)**	**Name of Length**	**Description and Contents**
96-127	32	Readable	Vendor specific data, read only
128-255	128	Reserved	Reserved for SFF-8079

Table 2 - EEPROM Serial ID Memory Contents (A0h)

9. Digital Diagnostic Monitor Characteristics

Data Address	Parameter	Accuracy	Unit
96-97	Transceiver Internal Temperature	±3.0	°C
98-99	VCC3 Internal Supply Voltage	±3.0	%
100-101	Laser Bias Current	±10	%
102-103	Tx Output Power	±3.0	dB
104-105	Rx Input Power	±3.0	dB

10. Regulatory Compliance

This unit complies with international Electromagnetic Compatibility (EMC) and international safety requirements and standards (see details in Table following).

Electrostatic Discharge (ESD) to the Electrical Pins	MIL-STD-883E Method 3015.7	Class 1(>1000 V)
Electrostatic Discharge (ESD) to the Duplex LC Receptacle	IEC 61000-4-2 GR-1089-CORE	Compatible with standards
Electromagnetic Interference (EMI)	FCC Part 15 Class B EN55022 Class B (CISPR 22B) VCCI Class B	Compatible with standards
Laser Eye Safety	FDA 21CFR 1040.10 and 1040.11 EN60950, EN (IEC) 60825-1,2	Compatible with Class 1 laser product.

11. Recommend Circuit Schematic

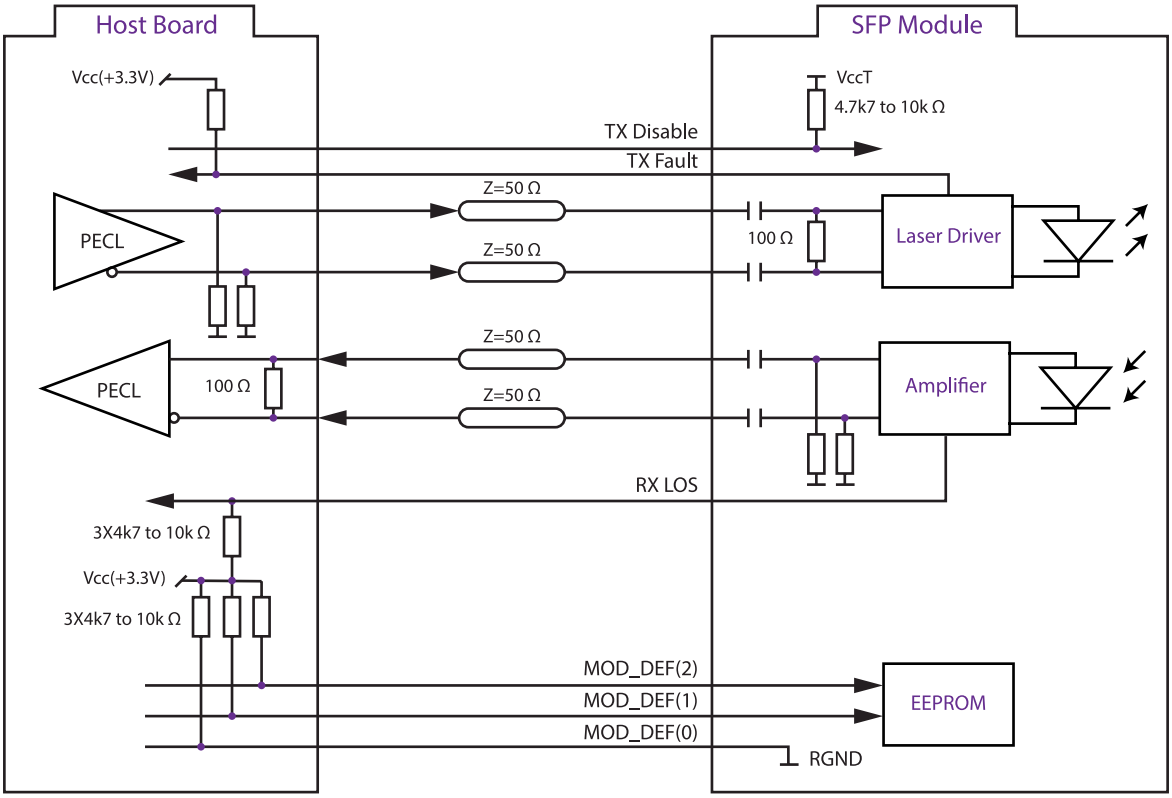

SFP Host Recommended Circuit

12. Mechanical Specifications

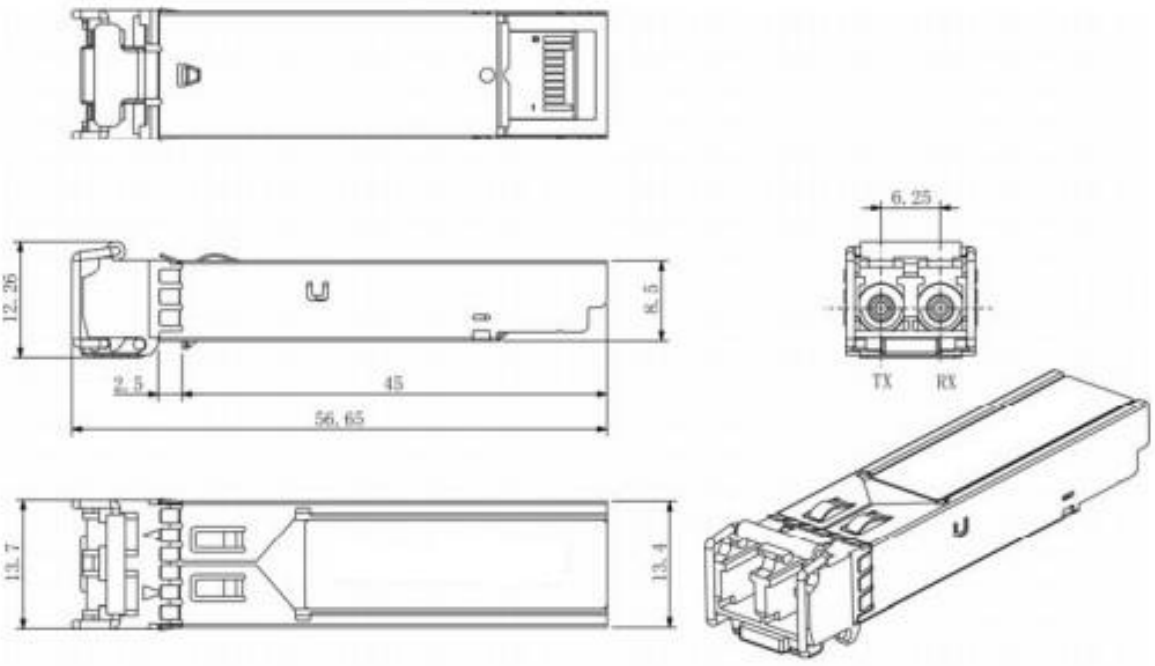

13. Contact Information

Approved Networks is a leading supplier of Network Transceivers and Connectivity products to Channel Partners, Resellers, and OEMs. With more than 9 years of direct industry experience, our products are resident in the most demanding and mission critical functional networks Worldwide. We serve as a Master Distributor to the largest CMs in the world and deploy the most rigorous testing and firmware management programs to bring the highest level of functional product to the market at a cost that makes sense.

Corporate Offices: **Approved Networks, Inc.**
Tel: 800.590.9535
Web: http://www.approvednetworks.com