700013121-A

1GBASE, GBIC, SX Transceiver

Features

- Operating data rate up to 1.25Gbps
- 850nm LD Transmitter
- Distance Up to 550m
- 3.3V/5V Power supply and TTL Logic Interface
- Compliant with GBIC Specification Rev5.5
- Duplex SC Connector Interface
- Hot Pluggable
- Commercial Operating Case Temperature: 0°C ~+70°C

Applications

- WDM GBE Links
- Fiber Channel Links
- SONET/SDH Equipment Interconnect

1. Description

The Approved Networks 700013121-A series optical transceivers meet the Gigabit Interface Converter (GBIC) specification Rev. 5.5. It satisfies the optical interface specifications defined in IEEE 802.3z Drift 5.0 for Gigabit Ethernet. This module is designed for Single-mode fiber and operates at a nominal wavelength of 1310 nm.

The transmitter section uses a multiple quantum well laser and is a class 1 laser compliant according to International Safety Standard IEC-60825. The receiver section uses an integrated InGaAs detector preamplifier (IDP) mounted in an optical header and a limiting post-amplifier IC. A PECL input /output logic interface is used. TTL RX-LOS output simplifies interface to external circuitry. A 20-pin SCA-2 host connector is used to connect the converter to the host system.

2. Absolute Maximum Ratings

Operation in excess of any absolute maximum ratings might cause permanent damage to this module.

Parameter	Symbol	Min	Typ	Max	Units
Storage Temperature	TS	-40		+85	ºC
Power Supply Voltage	VCC	0		6	V

3. Recommended Operating Environment

Parameter		Symbol	Min	Typ	Max	Unit
Case operating Temperature	Commercial	TC	0	-	70	°C
Supply Voltage		VCC	4.75	5	5.25	V
			3.17	3.3	3.45	
Supply Current		Icc			300	mA
Inrush Current		Isurge			Icc+30	mA
Baud Rate				1.25		GBaud

4. Performance Specifications

Transmitter						
Parameter	**Symbol**	**Min**	**Typ**	**Max**	**Unit**	**Notes**
LVPECL Inputs (Differential)	Vin	400		2500	mVp	AC coupled inputs
Input Impedance (Differential)	Zin	85	100	115	ohms	Rin > 100 kohms @ DC
Tx_DISABLE Input Voltage - High		2		Vcc+0.3	V	
Tx_DISABLE Input Voltage -Low		0		0.8	V	
Tx_FAULT Output Voltage - High		Vcc- 0.5		Vcc+0.3	V	Io = 400µA; Host Vcc
Tx_FAULT Output Voltage -Low		0		0.5	V	Io = -4.0mA
Receiver						
Parameter	**Symbol**	**Min**	**Typ**	**Max**	**Unit**	**Notes**
LVPECL Outputs (Differential)	Vout	400	800	1200	mVpp	AC coupled outputs
Output Impedance (Differential)	Zout	85	100	115	ohms	
Rx_LOS Output Voltage - High		Vcc- 0.5		Vcc+0.3	V	Io = 400µA; Host Vcc
Rx_LOS Output Voltage -Low		0		0.8	V	Io = -4.0mA
MOD_DEF (0:2)	VoH	2.5			V	With Serial ID
	VoL	0		0.5	V	

5. Optical Characteristics

Parameter		Symbol	Min	Typ	Max	Unit
9µm Core Diameter SMF				550		m
Data Rate				1.25		Gbps
Transmitter						
Parameter		**Symbol**	**Min**	**Typ**	**Max**	**Unit**
Centre Wavelength		λC	830	850	860	nm
Spectral Width (RMS)		σ			3	nm
Average Output Power		P0ut	-10		-3	dBm
Extinction Ratio		EX	9			dB
Rise/Fall Time(20%~~80%)		tr/tf			.26	ns
Output Optical Eye		IUT-T G.957 Compliant				
Data Input Swing Differential		VIN	500		2000	mV
Input Differential Impedance		ZIN	90	100	110	Ω
TX Disable	Disable		2.0		VCC+0.3	V
	Enable		0		0.8	
TX_Fault	Fault		2.0		VCC+0.3	V
	Normal		0		0.8	
Receiver						
Parameter		**Symbol**	**Min**	**Typ**	**Max**	**Unit**
Centre Wavelength		λC	770		860	nm
Receiver Sensitivity		PIN			-20	dBm
Output Differential Impedance		PIN	90	100	110	Ω
Data Output Swing Differential		VOUT	370		2000	mV
Rise/Fall Time		Tr/tf			2.2	ns
LOS De-AssertS		LOSD			-25	dBm
LOS Assert		LOSA	-40			dBm
LOS		High	2.0		VCC+0.3	V
		Low	0		0.8	

6. Mechanical Dimentions

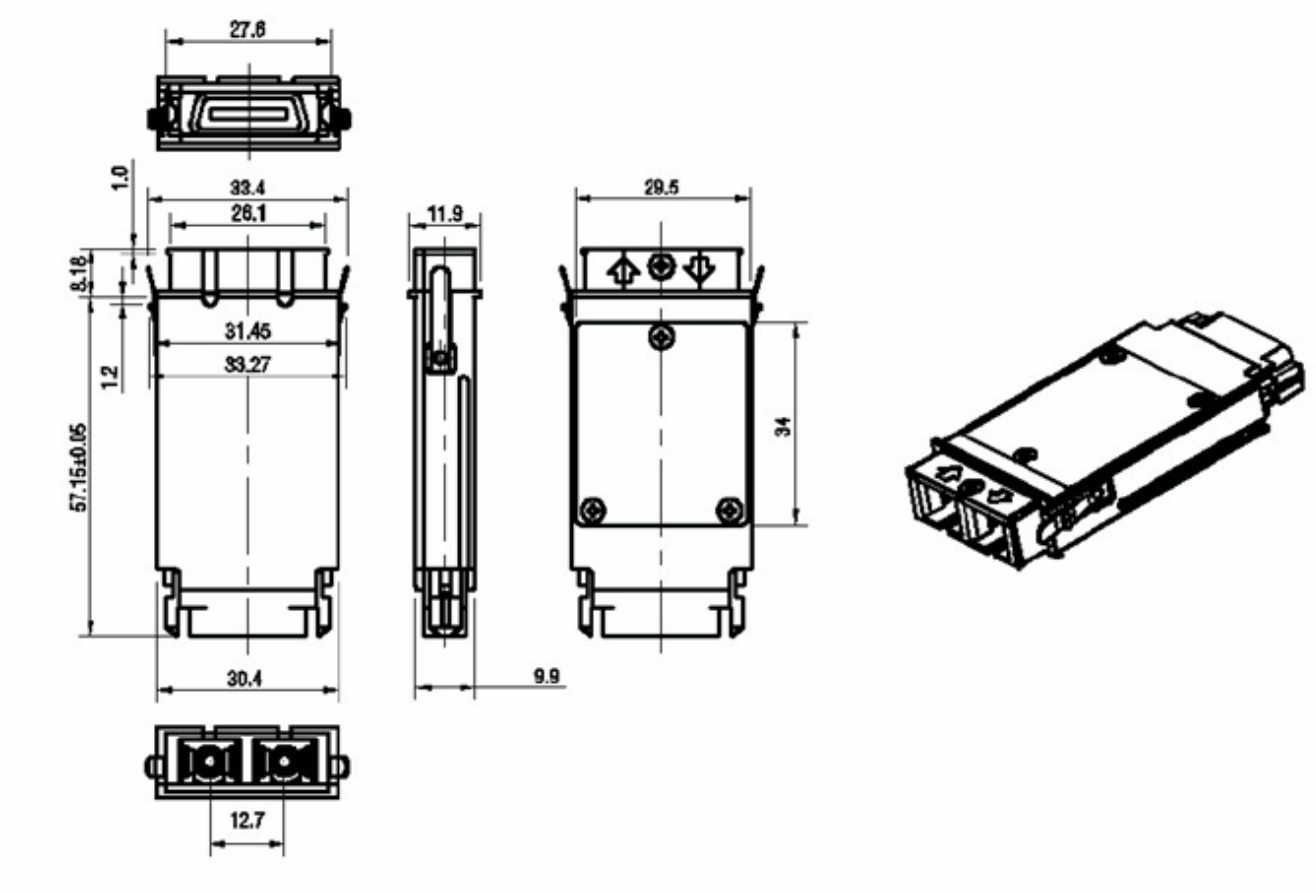

7. Regulatory Compliance

Feature	Standard	Performance
Electrostatic Discharge (ESD) to the Electrical Pins	MIL-STD-883E Method 3015.7	Class 1(>500 V) Isolation with the case
Electromagnetic Interference (EMI)	FCC Part 15 Class B	Compatible with standards
Laser Eye Safety	FDA 21CFR 1040.10 and 1040.11 EN 60950, EN (IEC) 60825-1,2	Compatible with Class I laser product. Compatible with TµV standards
Component Recognition	UL and CUL	UL file E317337
Green Products	RoHS	RoHS6

8. Contact Information

Approved Networks is a leading supplier of Network Transceivers and Connectivity products to Channel Partners, Resellers, and OEMs. With more than 9 years of direct industry experience, our products are resident in the most demanding and mission critical functional networks Worldwide. We serve as a Master Distributor to the largest CMs in the world and deploy the most rigorous testing and firmware management programs to bring the highest level of functional product to the market at a cost that makes sense.

Corporate Offices: **Approved Networks, Inc.**
Tel: 800.590.9535
Web: http://www.approvednetworks.com