280-0050-00-A

10GBASE, XFP, ZR, TUNABLE TRANSCIEVER

Features

- Compliant with XFP MSA
- Integrated OTN G.709 Digital Wrapper
- 6.2dB Net Coding Gain G-FEC for superior optical performance
- Tunability over full C-band 50GHz ITU-T wavelengths (SFF-8477 Control)
- Multi-protocol and bit rate support for 10GE, OC-192/STM-64, 10G FC and OTN
- Fully transparent 10G LAN PHY OTU2e at 11.09 Gbps
- Adaptive Receiver Decision Threshold Control for improved OSNR range
- True link BER reporting and Integrated PRBS 10 Gbps BERT for test set free link turn-up
- OTN Digital diagnostics and alarm reporting

Applications

- IP/MPLS and Ethernet Switches
- Access, Metro and Regional Carrier Ethernet DWDM Networks
- MSPP
- Customer Premise Ethernet Demarcation

1. Description

Approved Networks Tunable OTN XFP DWDM transceiver combines carrier grade OTN G.709 framing, FEC performance and 50GHz full C-band tunability into a XFP MSA compliant package. Approved Networks' Tunable OTN XFP is the only industry XFP MSA that can transparently carry a native 10G LAN PHY and SONET/SDH payload with a carriergrade DWDM Optical Transport Network (OTN) interface without the need for bandwidth limitation. OTN XFP combines a G.709 compliant Digital Wrapper and Forward Error Correction (FEC) with a M-Z modulated 50GHz tunable laser for superior optical performance and management functions equal to those found in external DWDM Transponder systems. Tunable OTN XFP is designed to interoperate with any Open DWDM line system that support 50GHz or 100GHzspaced wavelengths per the ITU-T C-band grid thus offering complete and cost effective DWDM transport for IP, MPLS, and Ethernet applications.

Tunable OTN XFP G.709 digital wrapper overhead and FEC functions are handled by the OTN Processor, which is integrated into the XFP module. The OTN Processor provides Operations Administration and Management (OAM) functions with G.709 alarms and Performance Management statistics.

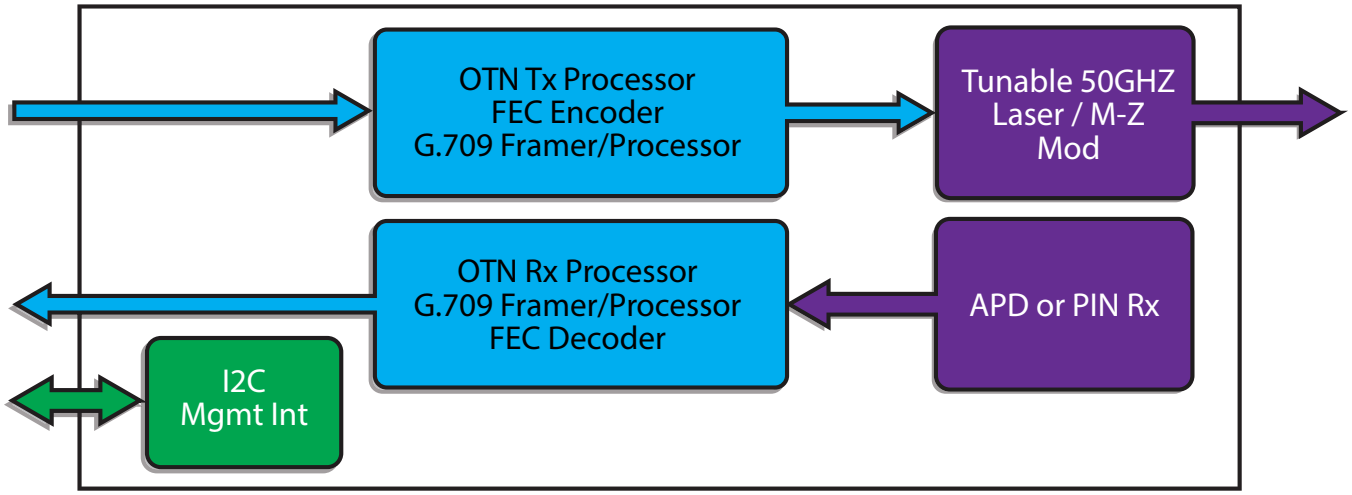

2. Management

Management of the Tunable OTN XFP is provided via the XFP MSA I2C interface, which supports digital diagnostic monitoring, alarms and loop backs to include G.709 and FEC management registers and wavelength tuning. Routers and Switches can reap the performance gains of FEC without changes to the existing I2C interface in a management Transparent Mode of operation, in which the Tunable OTN XFP activates the G.709 Digital Wrapper an FEC coding without the need for specific I2C provisioning.

3. Transceiver Optical Specifications

Parameter	Symbol	Min	Typical	Max	Units
Host Native Nominal Bit Rate		9.9533 (SONET/SDH) 10.3125 (LAN PHY)			Gbps
DWDM Line Interface Bit Rate		10.7092 (OTU2) 11.049 (OTU1e LAN PHY) 11.0957 (OTU2e LAN PHY)			Gbps
OTN Interface Bit Rate Deviation		+/- 20 (SONET) +/- 100 (LAN PHY)			ppm
DWDM Wavelength Range	λWDM	1528.38	-	1565.50	nm
Channel Spacing	fSPACING	50			GHz
Laser Tuning Range	fTUNE	Full C-band			
Wavelength Accuracy	ΔλEOL	-25	-	+25	pm
Extinction Ratio	ER	9	-	-	dB
Side Mode Suppression Ratio	SMSR	30	-	-	dB
Average Output Power	POUT	0	-	+3	dBm
Eye Mask Compliance		GR-253i3/G.959.1			
Receiver Operating Range @ 11.1Gbps 0ps/nm Dispersion +1400ps/nm Dispersion	PIN (80km APD)	-28 -25	- -	-7 -7	dBm dBm

Parameter	Symbol	Min	Typical	Max	Units
Receiver Operating Range @ 11.1Gbps 0ps/nm Dispersion +1400ps/nm Dispersion	PIN (40km PIN)	-18 -16	- -	0 -2	dBm dBm
OSNR Requirement @ 11.1Gbps 0 ps/nm -500ps/nm to +1300ps/nm Dispersion -18dBm to -8dBm Input	OSNRMIN (80km APD)	16 20	- -	- -	dB/ 0.1nm
OSNR Requirement @ 11.1Gbps 0 ps/nm +800ps/nm Dispersion -12dBm to -1dBm Input	OSNRMIN (40km PIN)	15.5 19	- -	- -	dB/ 0.1nm
Jitter Compliance	-	802.3ae/GR-253i3			
Operating Case Temperature	TC	0	-	70	°C
Storage Temperature	Tstg	-40	-	85	°C

4. PRBS-31 "True Link" Pattern Generator and Checker

The OTN XFP "True Link" feature consists of a PRBS-31 Generator and Checker to allow the customer to determine the 11Gbps channel performance without the need for costly 10GE or OC-192 payload test equipment. In the transmit direction a PRBS-31 pattern is generated and inserted into the OTU-2 payload portion of the frame. The OTU-2, ODU-2 and FEC data is generated and monitored normally to allow for link alarming and FEC correction performance monitoring. A status bit it provided to the user to denote PRBS-31 pattern synchronization. In the receive direction, the PRBS-31 payload is decoded and checked for individual bit level errors. A PRBS-31 payload error counter is provided via the OTN XFP standard I2C interface.

The following I2C registers are used for the True Link feature:

Page	Reg	Bit	Type	Title	Description	Settings
03h	183	7	R/W, SC	PRBS31 Control (Line Side)	PRBS-31 error counter reset (Self Clearing Bit)	1 = Reset PRBS-31 error counter (This bit is self clearing back to zero) 0 = Normal operation.
03h	183	5:6	R/W		Reserved	
03h	183	4	RO		PRBS31 sync status	0 = PRBS-31 Rx pattern sync present 1 = PRBS-31 Rx pattern sync error
03h	183	2:3	R/W		Reserved	

Page	Reg	Bit	Type	Title	Description	Settings
03h	183	1	R/W		Enable PRBS31 pattern on Rx Path	1 = Enable PRBS31 payload read in the Rx direction. If FEC enabled, PRBS31 is error corrected. If FEC is off, PRBS1 raw data is sent. 0 = Disable PRBS31 payload read in the Rx direction.
03h	183	0	R/W		Enable PRBS31 pattern on Tx Path	1 = Enable PRBS31 payload insertion in the Tx direction. The Tx direction PRBS data is inserted as the payload data in the OTU2 frame. 0 = Disable PRBS31 payload insertion in the Rx direction.

Page	Reg	Bit	Type	Title	Description	Settings
03h	184	7:0	RO	PRBS31 Checker (Line Side)	PRBS31 Error Counter (MSB- 32 bit counter)	PRBS31 Error Count (MSB- 32 bit)
03h	185	7:0	RO		PRBS31 Error Counter (17 to 24 of 32 bit counter)	PRBS31 Error Count (17 to 24 of 32 bit counter).
03h	186	7:0	RO		PRBS31 Error Counter (8 to 16 of 32 bit counter)	PRBS31 Error Count (8 to 16 of 32 bit counter)
03h	187	7:0	RO		PRBS31 Error Counter (LSB- 32 bit counter)	PRBS31 Error Count (LSB- 32 bit).

5. Link Checker Feature

The OTN XFP has the optional "Link Checker" feature, allowing the customer to proactively monitor the link performance margin in real time locally or remotely. Link Checker provides proactive alarms to alert the customer of a link falling below a pre-defined margin threshold, triggering an investigation of the optical layer to rectify the degradation before the customer takes errors. The user monitors Laser Bias Current to verify the health or margin on the OTN wavelength. The Link Checker margin can vary between 3 and 12, in which the higher the number the higher the margin. This is illustrated in the graph below.

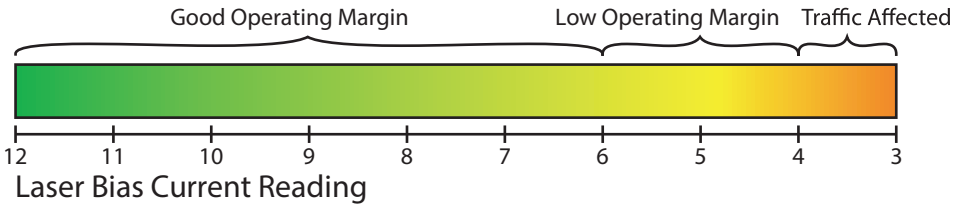

As seen an OTN XFP DWDM channel with a Link Checker reading of 6 or higher is operating with a good operating margin. Between 4 and 6 the link margin is low and may be the indicator of a link problem on the DWDM system. At 4 or below traffic is affected or down on that link.

The link margin is supported through the reading of the FEC Correction Error Rate (FCER) in the XFP and displaying that margin as the Laser Bias Current value on the router. The FEC correction error rate is averaged over a 25 second rolling window by the module software. In the case of failure or no errors being corrected, the correction error rate is shown as 12.

The transposition of the correction error rate to laser bias current is shown below:
The FEC Correction BER can be represented as:

xx = Mantissa yy = Exponent

For example, an error correction error rate of 3x10-6 where the Mantissa xx = 3 and the Exponent yy = 6

The Laser Bias Current on the router is then shown as = yy.xx mA

Therefore a FEC Correction Error Rate (FCER) of 3x10-6 is shown as a Laser Bias current of 6.3 mA Any error rate <10-5 will raise a Laser Bias Low Alarm in the system, which is an early warning indicator to the NOC to proactively monitor and correct for a degraded link before errors are seen by the customer.

6. OTN XFP Loopbacks

OTN XFP supports both host and line loopbacks. The host loopback is designed to loopback traffic towards the host before processing by the FEC and G.709 overhead processor in the OTN XFP module. A line loopback loops the traffic towards the OTN fiber network before processing the FEC and G.709 overhead. Both loopbacks are completed in the FEC/G.709 ASIC. All loopbacks are supported via the I2C interface.

The following loopbacks are supported:
1. Host Loopback (towards host). This is referred to as the XFI loopback in the XFF MSA Rev 4.5.
2. Line Loopback (towards OTN fiber network)

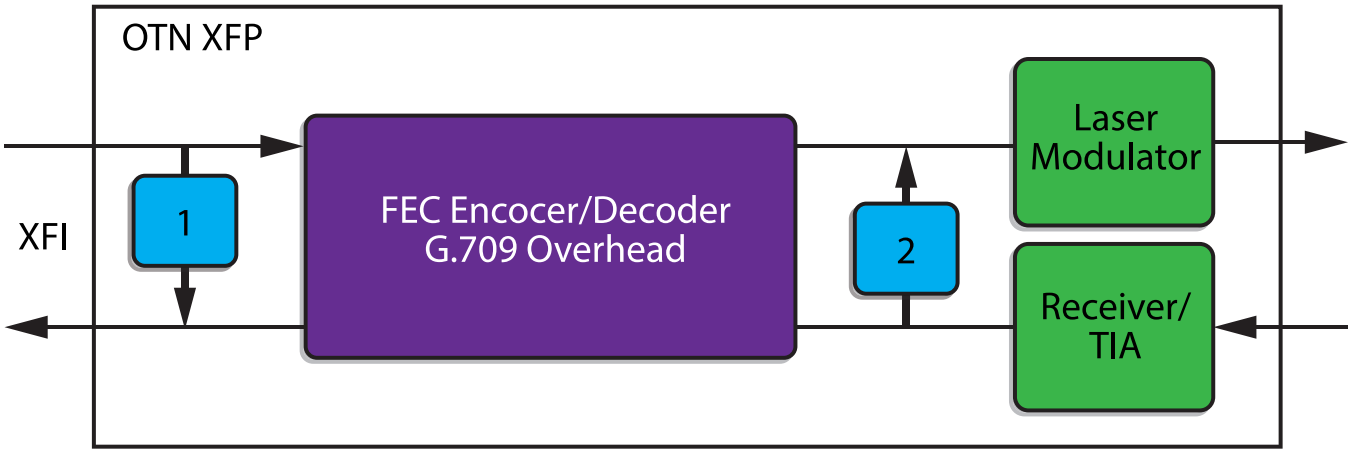

The XFP loopback settings are controlled according to the MSA XFP I2C interface using the following registers:

Table	Reg	Bits	Type	Category	Register Item	Feature Notes
Any	1	2	R/W	Signal Conditioner	Line Side Loopback	0 = Normal Operation 1 = Loopback Module Optical Input to Output
Any	1	1			XFI Loopback	0 = Normal Operation 1 = Loopback Module XFI Input to Output

7. Startup Autonomous Payload Searching

OTN XFP supports a payload search feature when the module is initially powered up or reset. The Payload Search feature is only valid in OTN mode and is run to select the correct payload data rate for the module if the host does not select the value in the XFP Signal Conditioner register. Since the OTN XFP contains PLLs and reference clocks centered on the exact OTN output bit rate, the module must be configured in the correct payload bit rate mode for proper operation. A module not configured correctly cannot pass traffic. The Payload Search mode works in the following steps:

1. Upon module initialization or reset completion, the module default configuration is 10GE LAN PHY (10.3125Gbps) with OTN enabled (11.1Gbps). When the module exists the initialization stage, an internal check is performed on the incoming host side data to see if the payload data rate matches the configured 10GE (10.3125Gbps) data rate.

2. If the module is not able to synchronize to the default configuration data rate of 10GE (10.3125Gbps) with the incoming host data, the module is automatically configured by the firmware to a data rate of OC-192/STM-64 (9.953Gbps) and timing synchronization is checked again.

3. If after step 2 the data rate of the incoming host data is not synchronized to the payload data rate, the module will continue switching between 10GE and OC-192/STM-64 data rates until a synchronization of payload data rate occurs. The time between switches is about 5 seconds. If no input electrical XFI signal is present on the host input side, the Payload Searching algorithm is frozen and resumed when data is detected.

4. If at any time during Step 1. through Step 3. the payload data is correctly synchronized to the module settings, the Autonomous Payload Searching loop is exited. During the Payload Searching algorithm the laser output is disabled and the module is held in a MOD_NR state. The data rate setting of the Signal Conditioner register [1.7:4] will display the OTN XFP current payload data rate setting.

The following conditions force the module to exit the Autonomous Payload Searching algorithm:

Condition	Description	Notes
Host Payload Sync to Module Settings	The host input electrical XFI data rate matches the module payload data rate configuration	Host data must be present
Signal Conditioner Register is written	Lower Memory Register 1 is written	Signifies host is writing data rate value in I2C Register
OTN Setup Register 1 is written	Register [03,128] is written	Signifies host is writing OTN configuration change, which can affect data rate
Payload Search is Disabled	Register [03,192.2] is written to '0'	Host disabled the Payload Search via I2C

The following state diagram explains the Autonomous Payload Search operation:

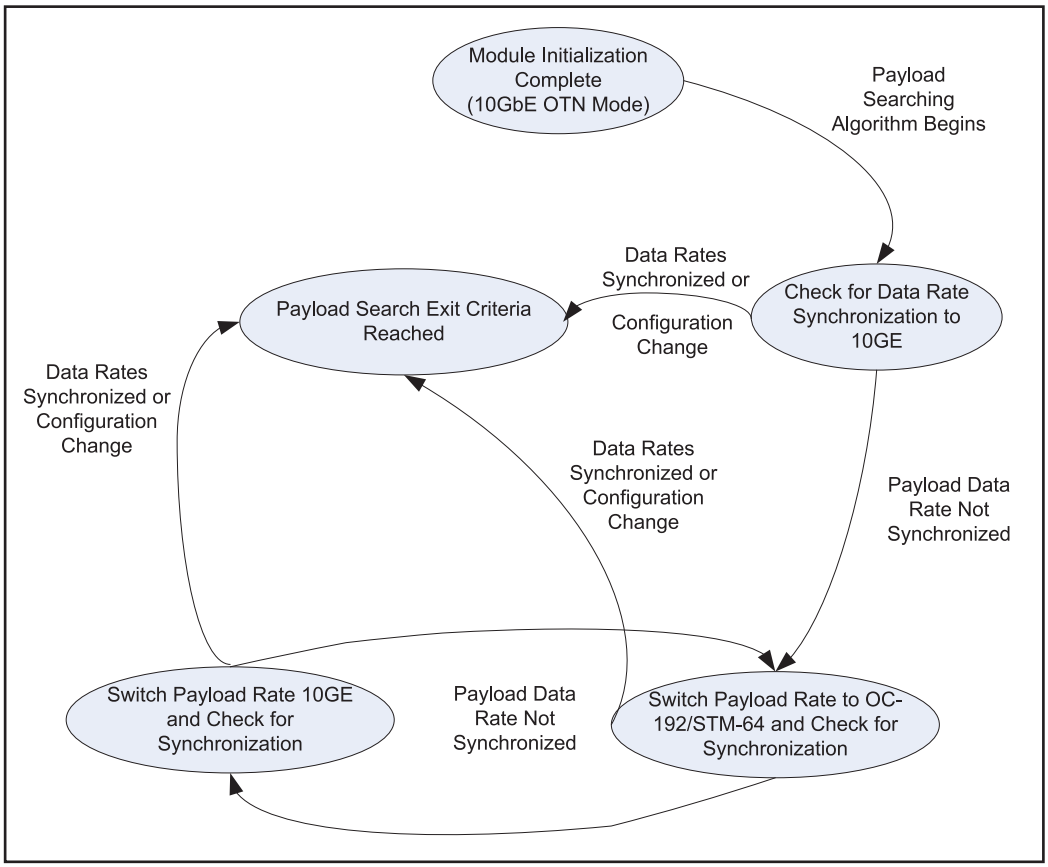

Figure 1. Autonomous Payload Searching Algorithm State Machine

Note:

During the Autonomous Payload Searching algorithm, the PM error counters and the PM time counter is delayed due to extra processor power required to support the Payload Search algorithm. Once the payload search algorithm is completed, the host should normalize the PM error and time counters as part of the OTN XFP initialization process.

8. Laser Safety

OTN XFP is compliant to IEC 60825-1 laser safety. The DWDM laser output is specified as a Class 1 output power as defined in IEC 60825-1, ed 2.0 2007.

CAUTION – Use of controls or adjustments or performance of procedures other than those specified herein may result in hazardous radiation exposure.

9. Maximum Power Ratings

OTN XFP power rail draw is shown below for Tunable DWDM XFP with 70° case temperature:

Parameter	Voltage	Max	Unit
+5V Current	5	210	mA
5V Power		1.05	W
+1.8V Current	1.8	735	mA
+1.8V Power		1.32	W
+3.3V Current	3.3	575	mA
+3.3V Power		1.90	W
Total Module Power		4.27	W

10. DOM Alarm Thresholds and I2C Locations

All Alarm Thresholds for OTN XFP are configured at the manufacturer and cannot be configured through the I2C interface (i.e. thresholds are not provisionable).Alarm thresholds for each DOM parameter are located in the following registers.

Threshold Value Register	Latched Alarm	Threshold Size (Bytes)	Name
02-03	80.7	2	Transceiver Temp High Alarm
04-05	80.6	2	Transceiver Temp Low Alarm
06-07	82.7	2	Transceiver Temp High Warning
08-09	82.6	2	Transceiver Temp Low Warning
10-17	N/A	8	Reserved
18-19	80.3	2	Laser Bias Current High Alarm
20-21	80.2	2	Laser Bias Current Low Alarm
22-23	82.3	2	Laser Bias Current High Warning
24-25	82.2	2	Laser Bias Current Low Warning
26-27	80.1	2	Laser Output Power High Alarm
28-29	80.0	2	Laser Output Power Low Alarm
30-31	82.1	2	Laser Output Power High Warning
32-33	82.0	2	Laser Output Power Low Warning
34-35	81.7	2	Receive Optical Power High Alarm

Threshold Value Register	Latched Alarm	Threshold Size (Bytes)	Name
36-37	81.6	2	Receive Optical Power Low Alarm
38-39	83.7	2	Receive Optical Power High Warning
40-41	83.6	2	Receive Optical Power Low Warning
N/A	86.7	N/A	5V High Alarm
	86.6		5V Low Alarm
	86.5		3.3V High Alarm
	86.4		3.3V Low Alarm
	86.3		1.8V High Alarm
	86.2		1.8V Low Alarm
	86.1		-5V High Alarm (Not Used)
	86.0		-5V Low Alarm (Not Used)
	87.7		5V High Warning
	87.6		5V Low Warning
	87.5		3.3V High Warning
	87.4		3.3V Low Warning
	87.3		1.8V High Warning
	87.2		1.8V Low Warning

11. Pin Descriptions

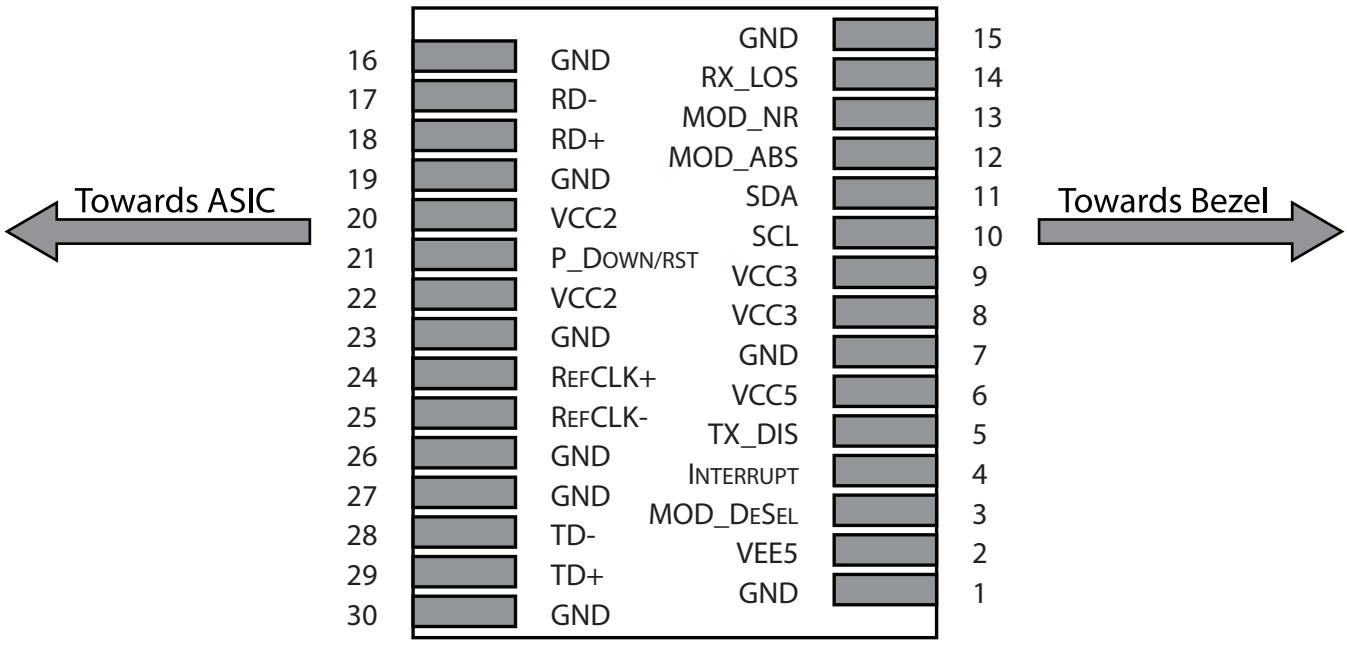

Pin	Logic	Symbol	Name/Description	Notes
1		GND	Module Ground	1
2		VEE5	Optional –5.2 Power Supply – Not required	
3	LVTTL-I	Mod-Desel	Module De-select; When held low allows the module to, respond to 2-wire serial interface commands	
4	LVTTL-O	Interrupt	Interrupt (bar); Indicates presence of an important condition which can be read over the serial 2-wire interface	2
5	LVTTL-I	TX_DIS	Transmitter Disable; Transmitter laser source turned off	
6		VCC5	+5 Power Supply – Not required	
7		GND	Module Ground	
8		VCC3	+3.3V Power Supply	
9		VCC3	+3.3V Power Supply	
10	LVTTL-I	SCL	Serial 2-wire interface clock	2
11	LVTTL- I/O	SDA	Serial 2-wire interface data line	2
12	LVTTL-O	Mod_Abs	Module Absent; Indicates module is not present. Grounded in the module.	2
13	LVTTL-O	Mod_NR	Module Not Ready;	2
14	LVTTL-O	RX_LOS	Receiver Loss of Signal indicator	2
15		GND	Module Ground	1
16		GND	Module Ground	1
17	CML-O	RD-	Receiver inverted data output	
18	CML-O	RD+	Receiver non-inverted data output	
19		GND	Module Ground	1
20		VCC2	+1.8V Power Supply – Not required	3
21	LVTTL-I	P_Down/ RST	Power Down; When high, places the module in the low power stand-by mode and on the falling edge of P_Down initiates a module reset. Reset; The falling edge initiates a complete reset of the module including the 2-wire serial interface, equivalent to a power cycle.	
22		VCC2	+1.8V Power Supply – Not required	3
23		GND	Module Ground	1
24	PECL-I	RefCLK+	Reference Clock non-inverted input, AC coupled on the host board	
25	PECL-I	RefCLK-	Reference Clock inverted input, AC coupled on the host board	
26		GND	Module Ground	1
27		GND	Module Ground	1
28	CML-I	TD-	Transmitter inverted data input	
29	CML-I	TD+	Transmitter non-inverted data input	
30		GND	Module Ground	1

Notes:

1. Module ground pins (GND) are isolated from the module case and chassis ground within the module.
2. Shall be pulled up with 4.7K-10K ohms to a voltage between 3.15V and 3.45V on the host board.

12. Wavelengths Supported

Frequency	Wavelength	Frequency	Wavelength	Frequency	Wavelength
196.15	1528.38	196.10	1528.77	196.05	1529.16
196.00	1529.55	195.95	1529.94	195.90	1530.33
195.85	1530.72	195.80	1531.12	195.75	1531.51
195.70	1531.90	195.65	1532.29	195.60	1532.68
195.55	1533.07	195.50	1533.47	195.45	1533.86
195.40	1534.25	195.35	1534.64	195.30	1535.04
195.25	1535.43	195.20	1535.82	195.15	1536.22
195.10	1536.61	195.05	1537.00	195.00	1537.40
194.95	1537.79	194.90	1538.19	194.85	1538.58
194.80	1538.98	194.75	1539.37	194.70	1539.77
194.65	1540.16	194.60	1540.56	194.55	1540.95
194.50	1541.35	194.45	1541.75	194.40	1542.14
194.35	1542.54	194.30	1542.94	194.25	1543.33
194.20	1543.73	194.15	1544.13	194.10	1544.53
194.05	1544.92	194.00	1545.32	193.95	1545.72
193.90	1546.12	193.85	1546.52	193.80	1546.92
193.75	1547.32	193.70	1547.72	193.65	1548.11
193.60	1548.51	193.55	1548.91	193.50	1549.32
193.45	1549.72	193.40	1550.12	193.35	1550.52
193.30	1550.92	193.25	1551.32	193.20	1551.72
193.15	1552.12	193.10	1552.52	193.05	1552.93
193.00	1553.33	192.95	1553.73	192.90	1554.13
192.85	1554.54	192.80	1554.94	192.75	1555.34
192.70	1555.75	192.65	1556.15	192.60	1556.55
192.55	1556.96	192.50	1557.36	192.45	1557.77
192.40	1558.17	192.35	1558.58	192.30	1558.98
192.25	1559.39	192.20	1559.79	192.15	1560.20
192.10	1560.61	192.05	1561.01	192.00	1561.42
191.95	1561.83	191.90	1562.23	191.85	1562.64
191.80	1563.05	191.75	1563.45	191.70	1563.86
191.65	1564.27	191.60	1564.68	191.55	1565.09
191.50	1565.50				

13. Contact Information

Approved Networks is a leading supplier of Network Transceivers and Connectivity products to Channel Partners, Resellers, and OEMs. With more than 9 years of direct industry experience, our products are resident in the most demanding and mission critical functional networks Worldwide. We serve as a Master Distributor to the largest CMs in the world and deploy the most rigorous testing and firmware management programs to bring the highest level of functional product to the market at a cost that makes sense.

Corporate Offices: **Approved Networks, Inc.**
Tel: 800.590.9535
Web: http://www.approvednetworks.com